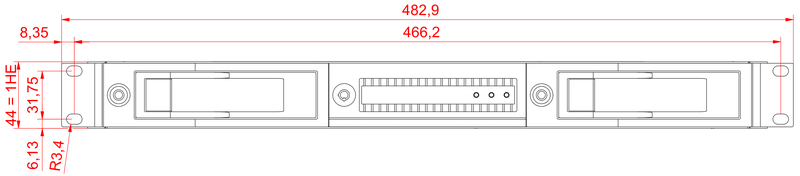

front view

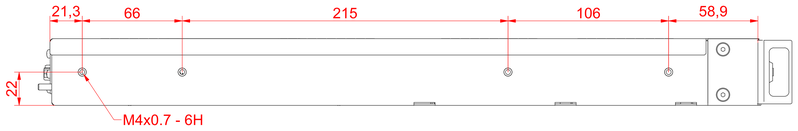

side view

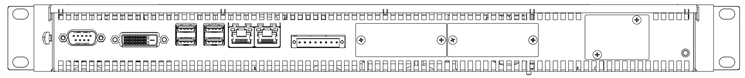

rear view

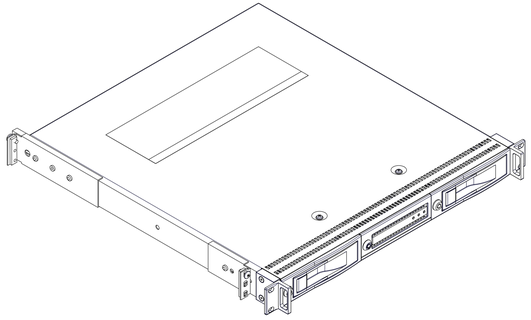

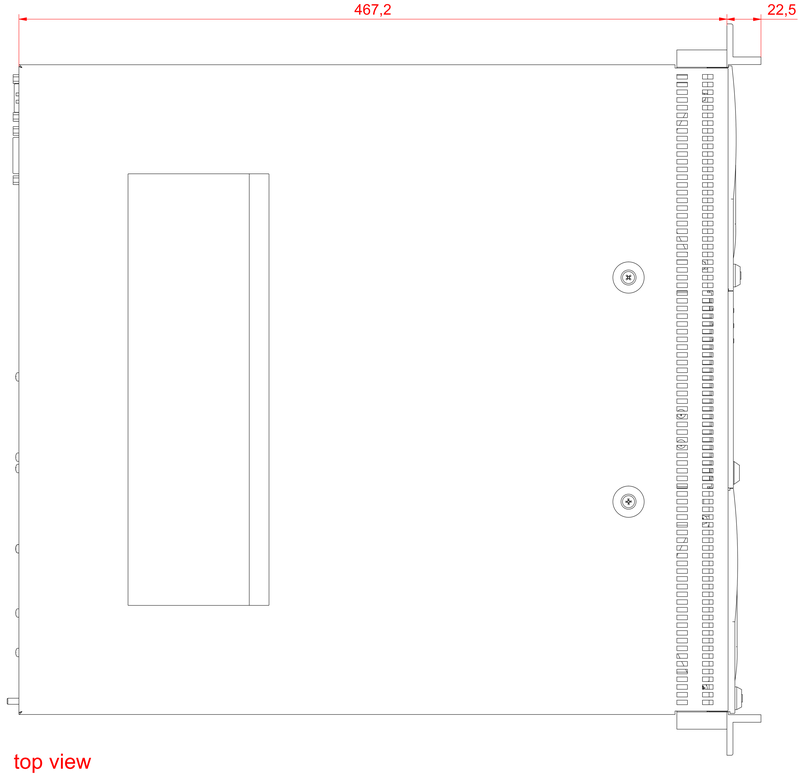

top view

C5210

main dimensions and fixing points

dimensions in mm

1.

6x
Washer (plastic) A:4,9 B:15,9 C:2,5
(Skiffy 003 0403 000 01)

6x
ISO 7380 - M4x8 - A2
(with hexagon socket)

2x
Telescopic rail
(Accuride DZ2907-0018)

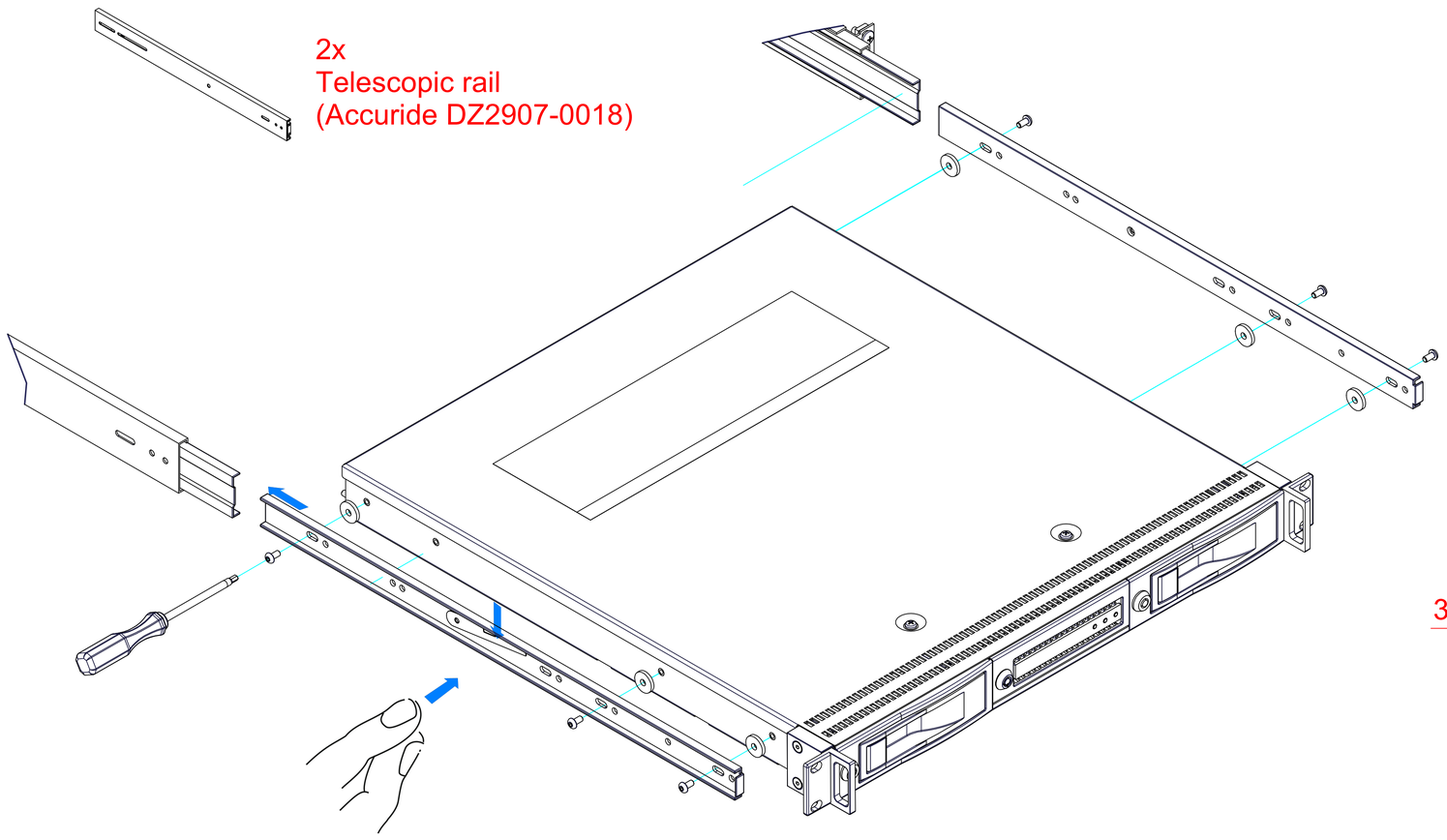

2.

Left & Right Version

Drawer Slide Bracket - Set
(Accuride: DZ63374-4)

8x
Screw kits for brackets

2x
Front - brackets

2x
Rear - brackets

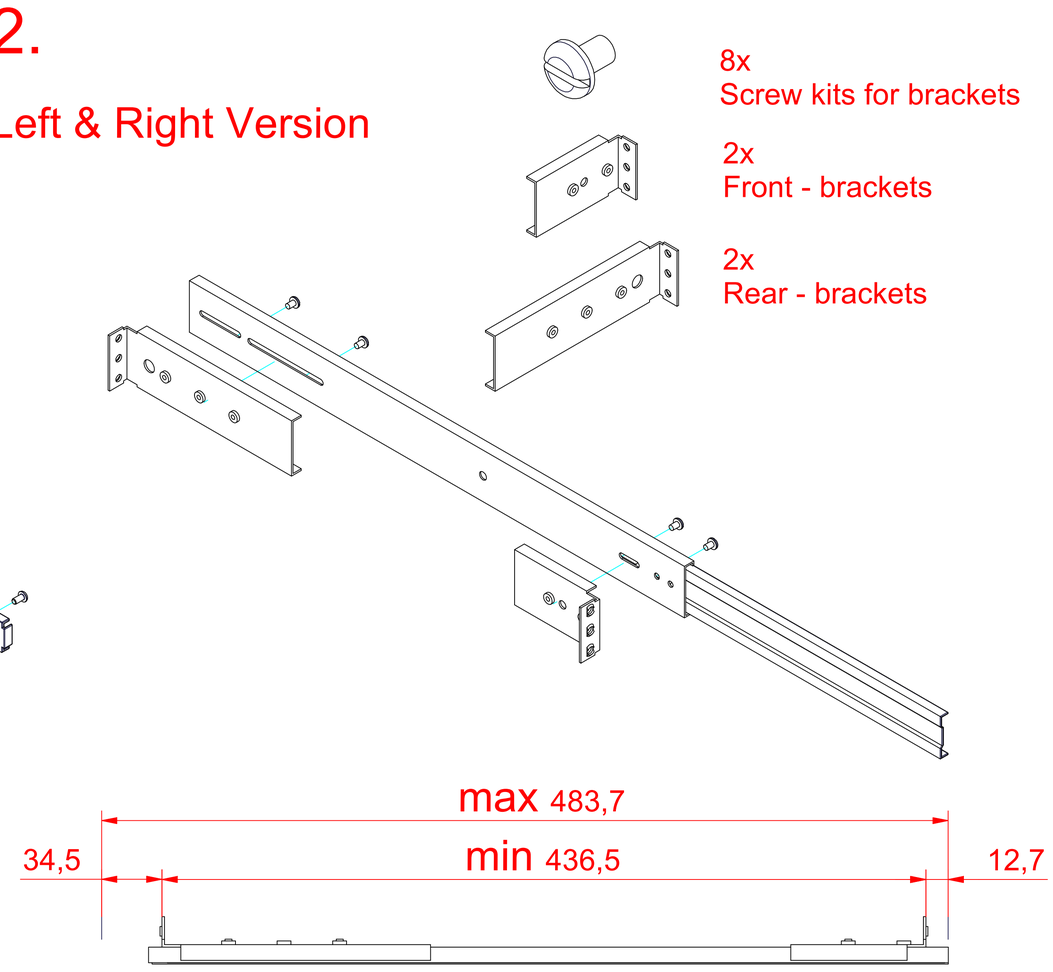

3.

Telescopic rail with brackets

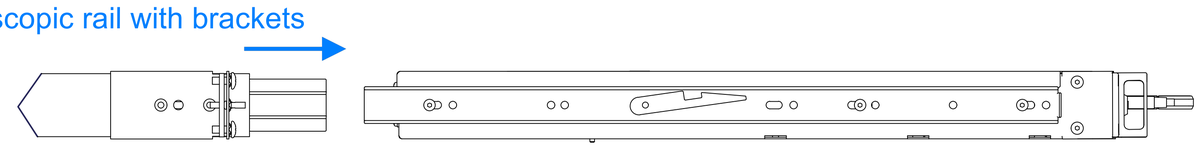

G (1 : 2)

4.

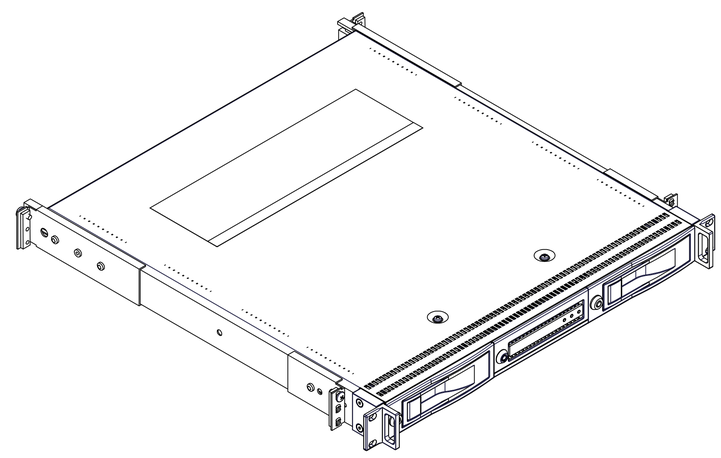

5.

Drawer Slide Bracket - Set
(Accuride: DZ63374-4)

8x
Fillister head screws

4x
Bar nuts

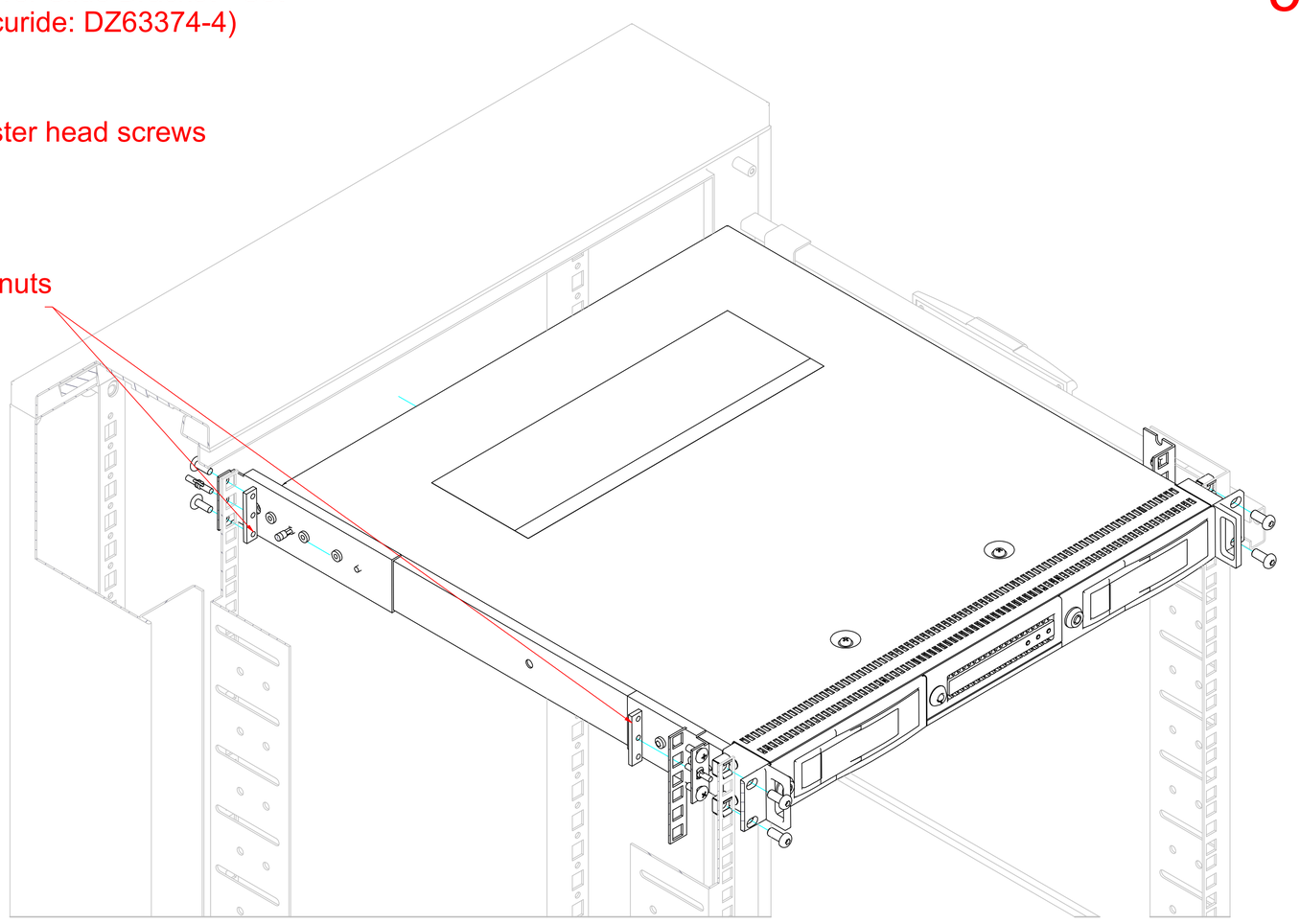

5-A

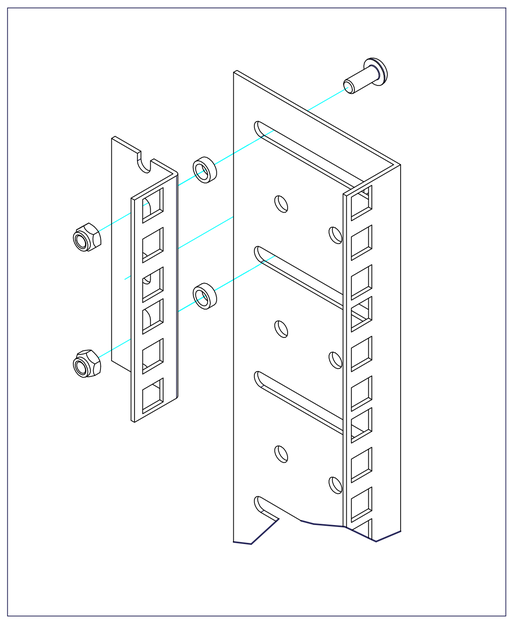

5-A

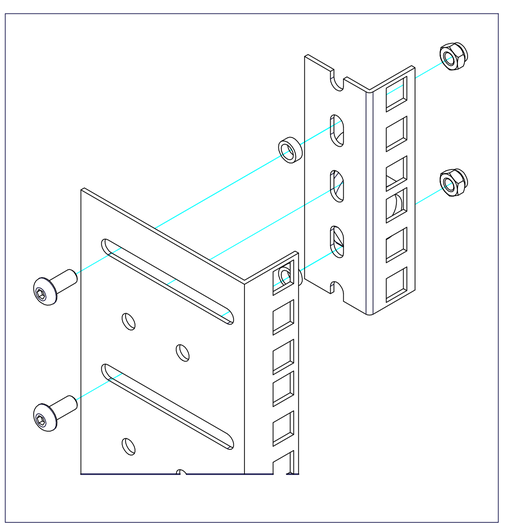

4x
Spacer: A:8,0 B:3,0 C:5,6
(Ettinger: 05.65.033)

4x
Hex nut: DIN 985 - M5 - A2
(Self locking)

4x
ISO 7380 - M5x12 - A2
(with hexagon socket)

2x
2HE - Profile rail
(Adam Hall GmbH: 61535B2)

6.

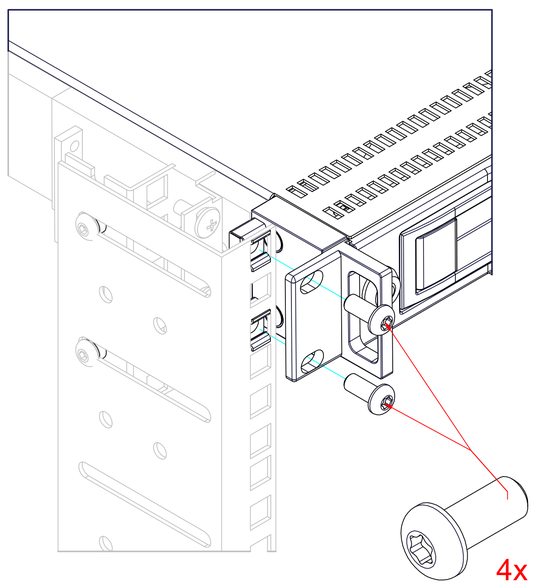

4x
ISO 7380 - M6x14 - A2
(with torx socket)

C9900-M712 telescopic rails and bracket set