CP6320-0001-D100/D106-M262-M261

main dimensions

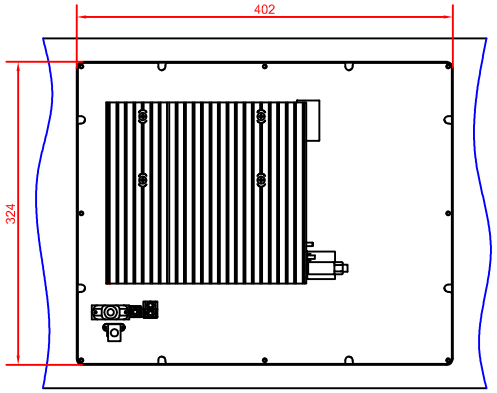

rear view with
install measure

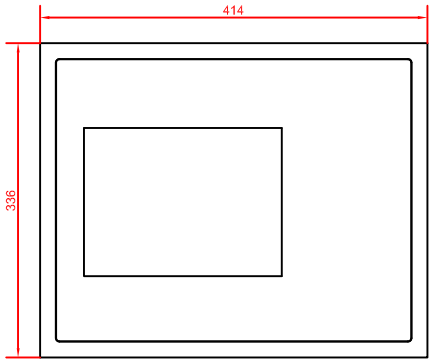

front view

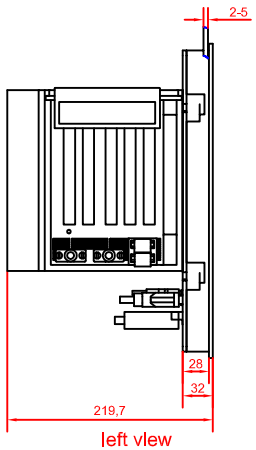

left view

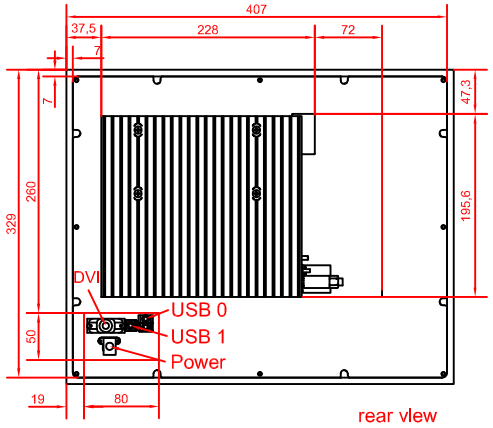

dimensions in mm

rear view