CP6322-0000-D100/D106-M262-M261
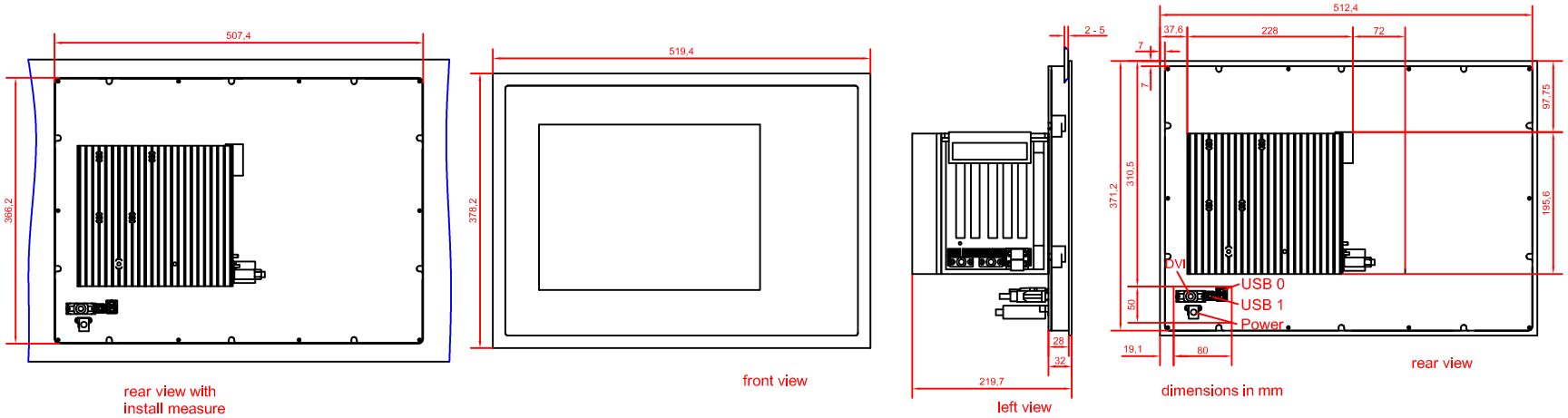
main dimensions